FIRST ANGLE PROJECTION

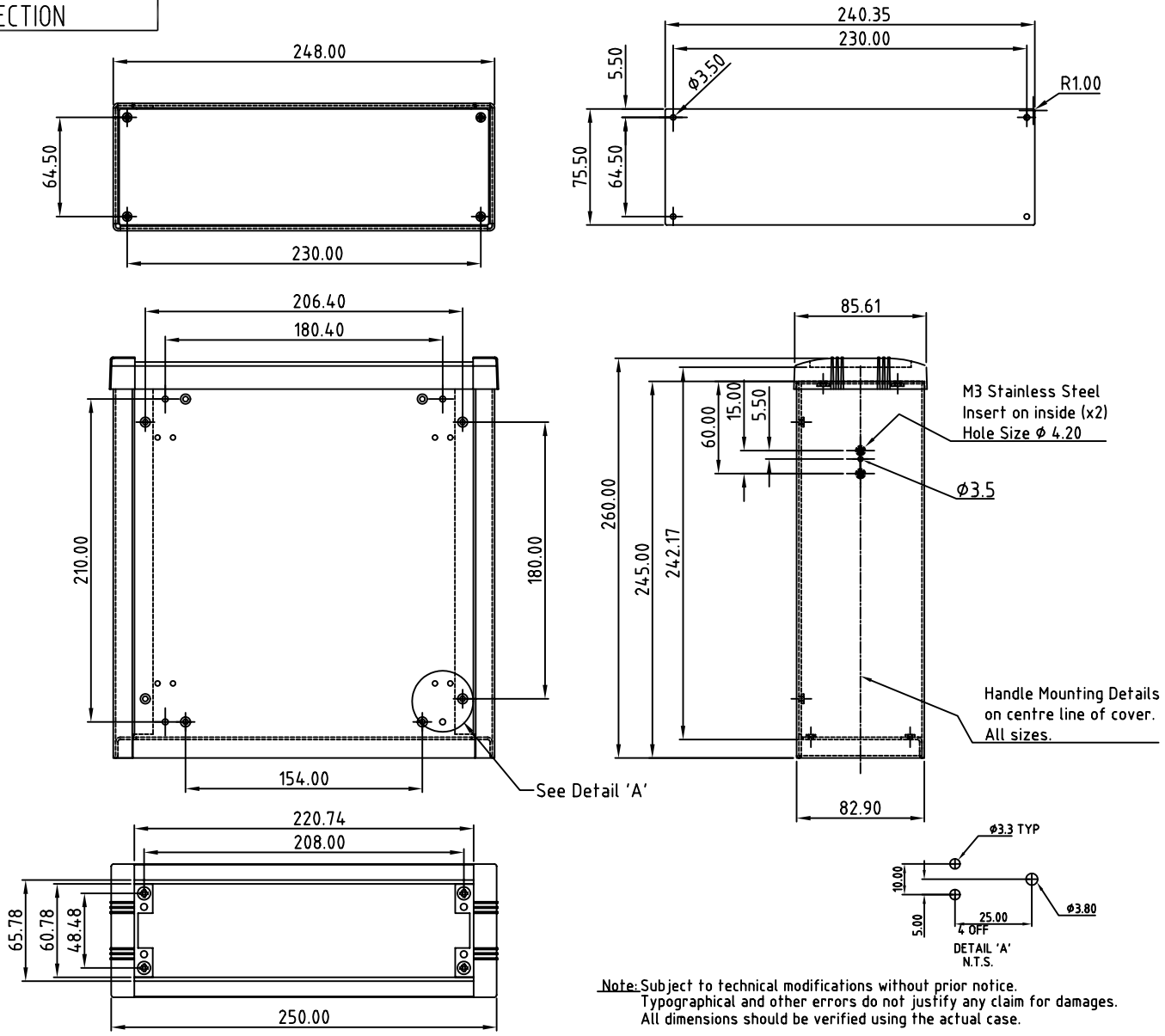

Note: Subject to technical modifications without prior notice.
Typographical and other errors do not justify any claim for damages.
All dimensions should be verified using the actual case.

Modifications	Iss
	1

Tolerances unless otherwise stated:

General tolerances ±0.20
Resultant tolerances between hole centers ±0.15
Tolerances on hole diameters ±0.05
Angles ± 0.5°
Surface finish 3.2

Required Finish:	Scale: 1:4	ALL DIMENSIONS IN MILLIMETRES		DO NOT SCALE
	Drawn by: Ian Cox	Checked By:	Drawing Number M5625125	Date drawn: August '05	Material Spec.
METCASE www.metcase.com	METCASE ENCLOSURES Unit 3, Mitchell Close Segensworth East, Fareham, Hampshire, PO15 5SE, UK.	Part Name UNIMET 3H		
		Part Number M5625125		Sheet 1 of 1

©OKW ENCLOSURES LTD; DATE AS SHOWN. THIS DRAWING CONTAINS PROPRIETARY INFORMATION OF OKW ENCLOSURES LTD AND IS TENDERED SUBJECT TO THE FOLLOWING CONDITIONS: THE INFORMATION BE RETAINED IN CONFIDENCE, NOT BE REPRODUCED OR COPIED, AND NOT BE USED OR INCORPORATED IN ANY PRODUCT, UNLESS PERMISSION IS OBTAINED IN WRITING FROM OKW ENCLOSURES LTD.

A4