FIRST ANGLE PROJECTION

Note: Subject to technical modifications without prior notice.
Typographical and other errors do not justify any claim for damages.
All dimensions should be verified using the actual case.

Modifications	Iss
	1

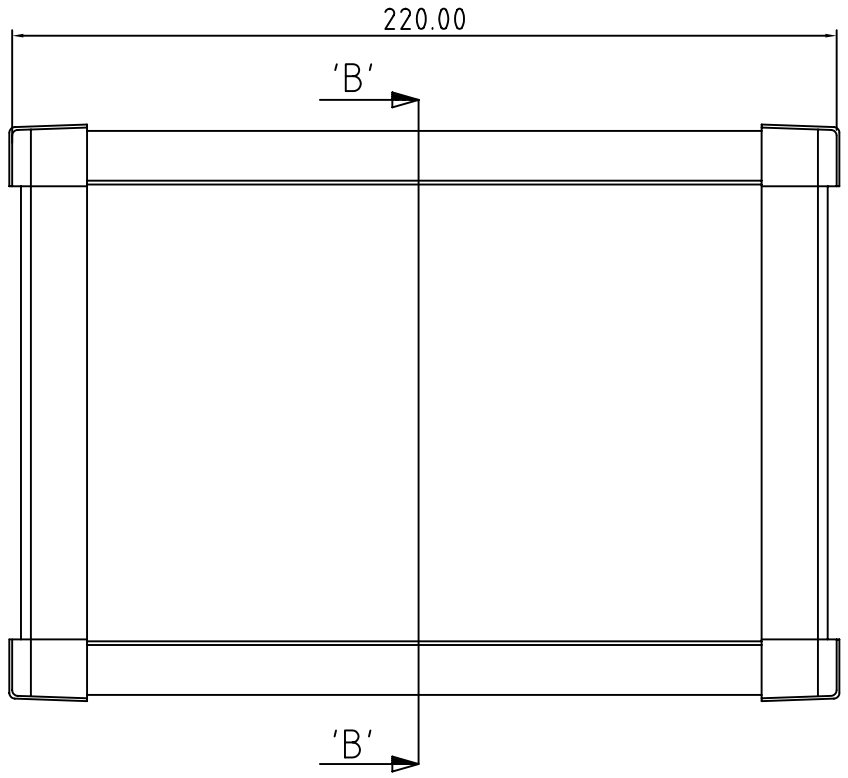

Base view

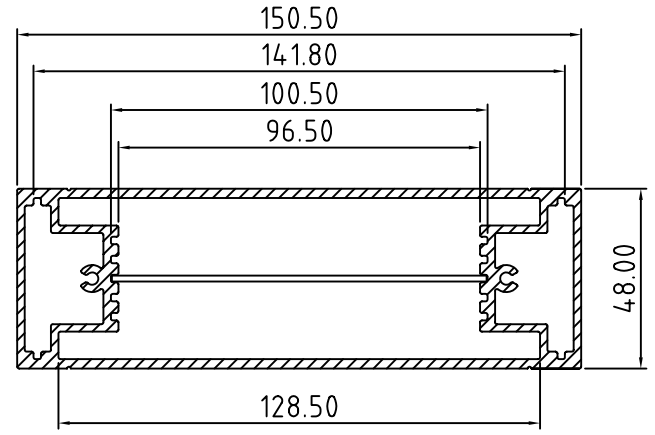

Section 'B-B'

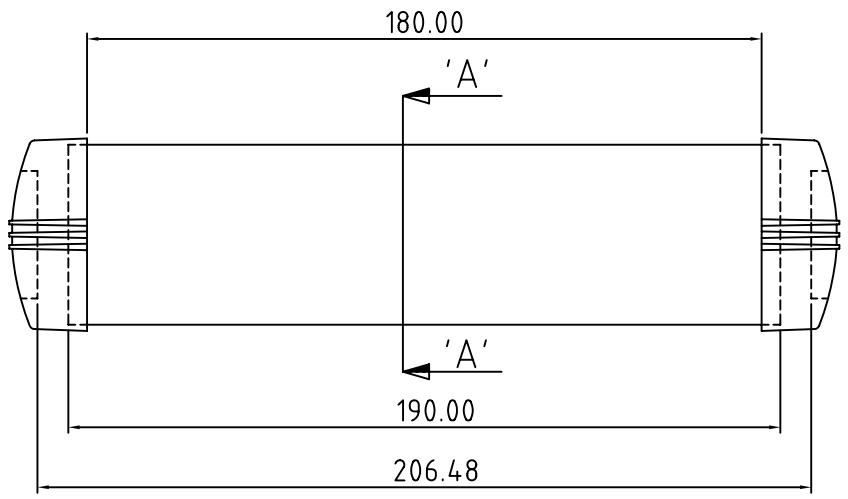

Side view

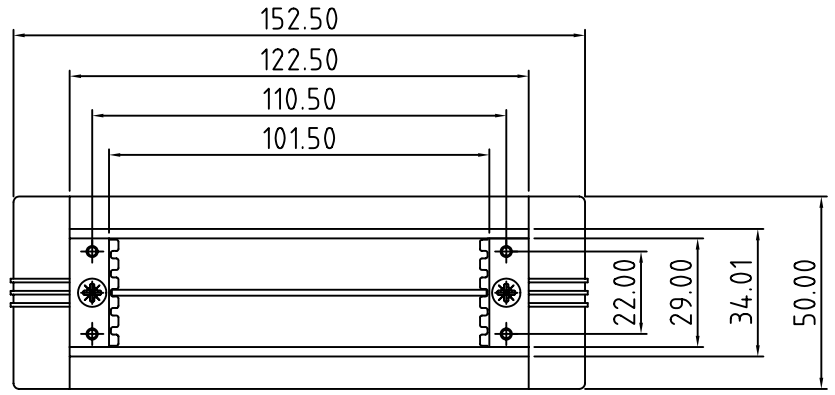

Front view

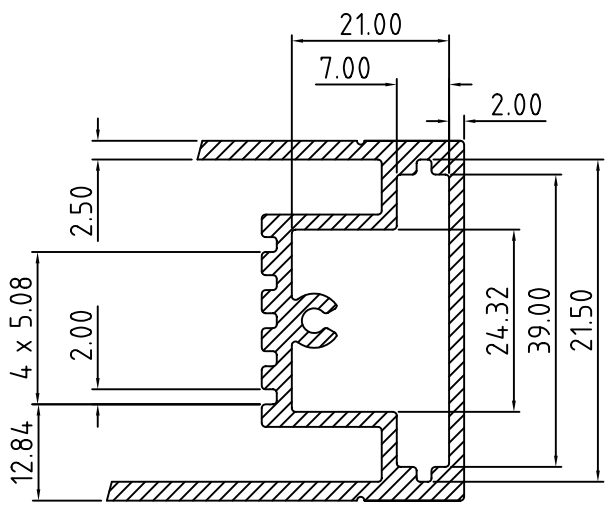

Section 'A-A
Scale 2:1

Tolerances unless otherwise stated:
General tolerances ±0.20
Resultant tolerances between hole centers ±0.15
Tolerances on hole diameters ±0.05
Angles ± 0.5°
Surface finish 3.2

Required Finish: RAL 7035 Powder Coat	Scale: 1:2	ALL DIMENSIONS IN MILLIMETRES		DO NOT SCALE
	Drawn by: Ian Cox	Checked By:	Drawing Number M5714055	Date drawn: August '05	Material Spec.

METCASE ENCLOSURES
Unit 3, Mitchell Close
Segensworth East, Fareham,
Hampshire, PO15 5SE, UK.
www.metcase.com

Part Name: Mettec-Euro 1
Part Number: M5714055
Sheet 1 of 1

©OKW ENCLOSURES LTD (DATE AS SHOWN). THIS DRAWING CONTAINS PROPRIETARY INFORMATION OF OKW ENCLOSURES LTD AND IS TENDERED SUBJECT TO THE FOLLOWING CONDITIONS: THE INFORMATION BE RETAINED IN CONFIDENCE, NOT BE REPRODUCED OR COPIED, AND NOT BE USED OR INCORPORATED IN ANY PRODUCT, UNLESS PERMISSION IS OBTAINED IN WRITING FROM OKW ENCLOSURES LTD.

A3